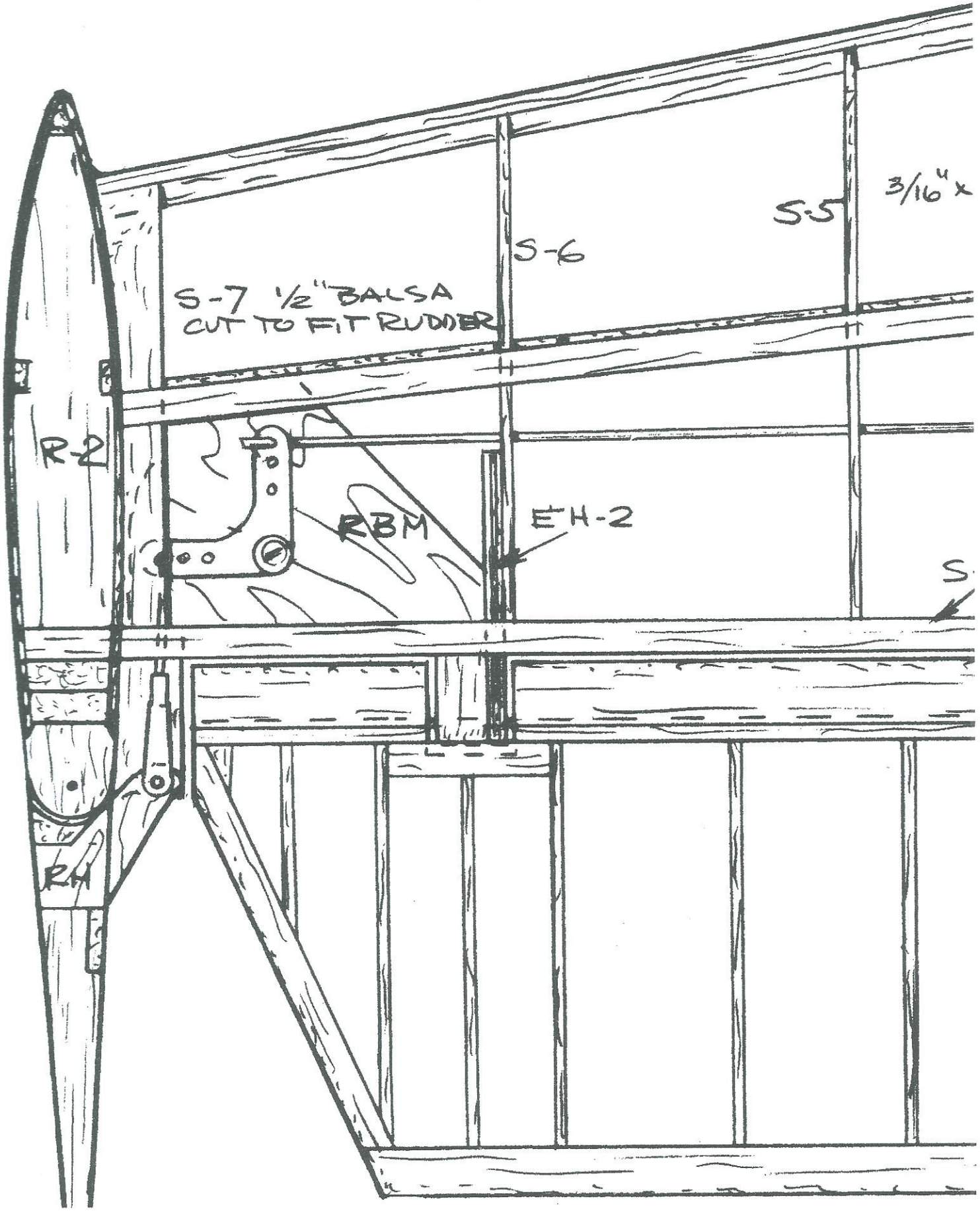
S-7 1/2" BALSA
CUT TO FIT RUDDER
S-6
S-5
3/16" x
R-2
RBM
EH-2
S
RH