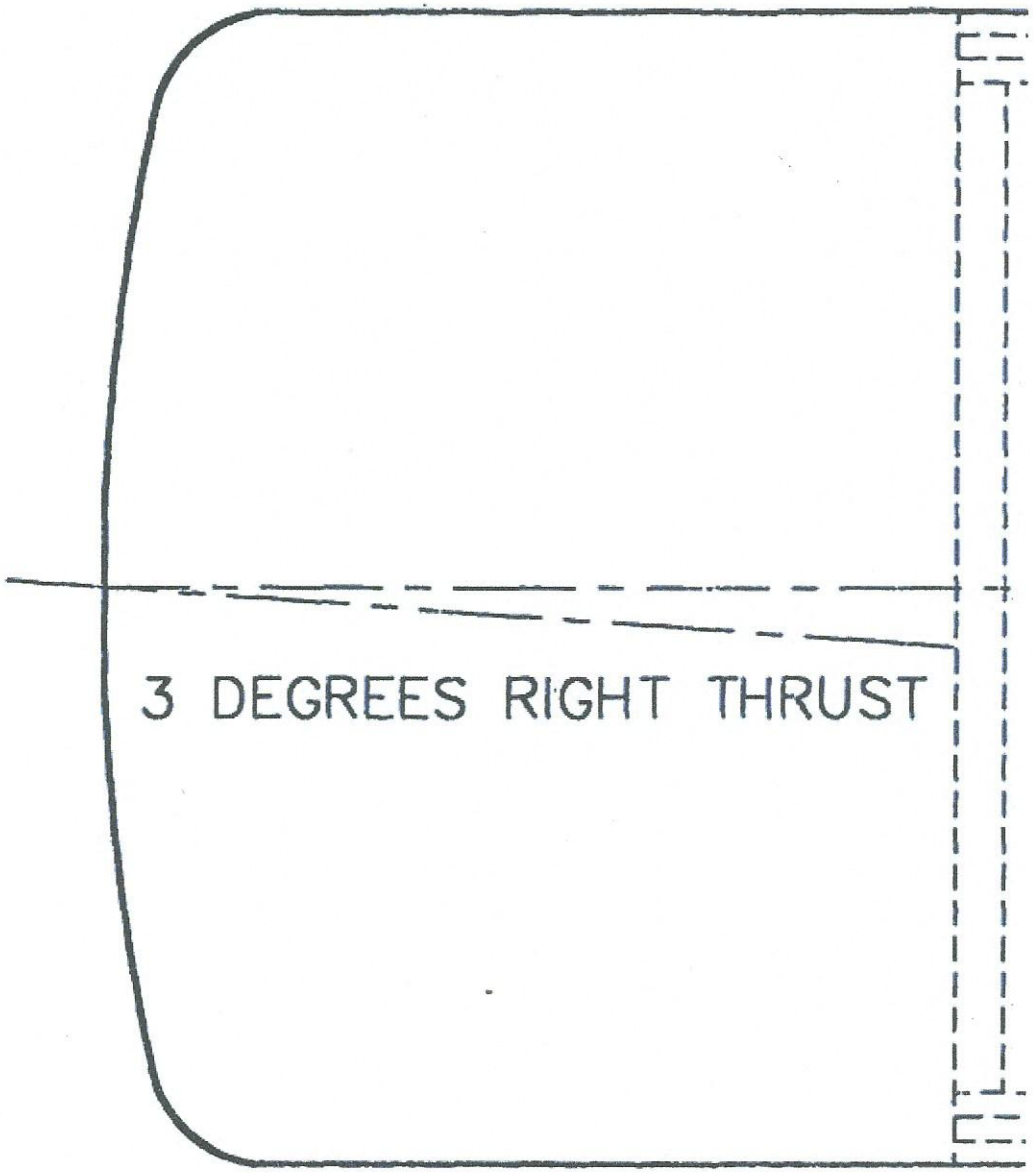
3 DEGREES RIGHT THRUST

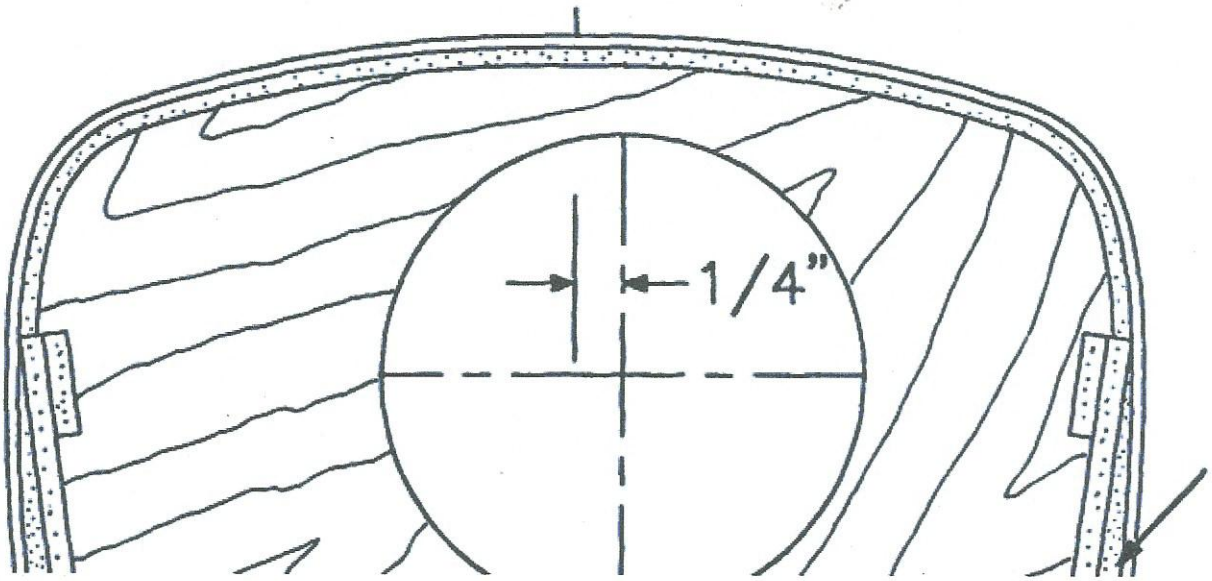
1/4"