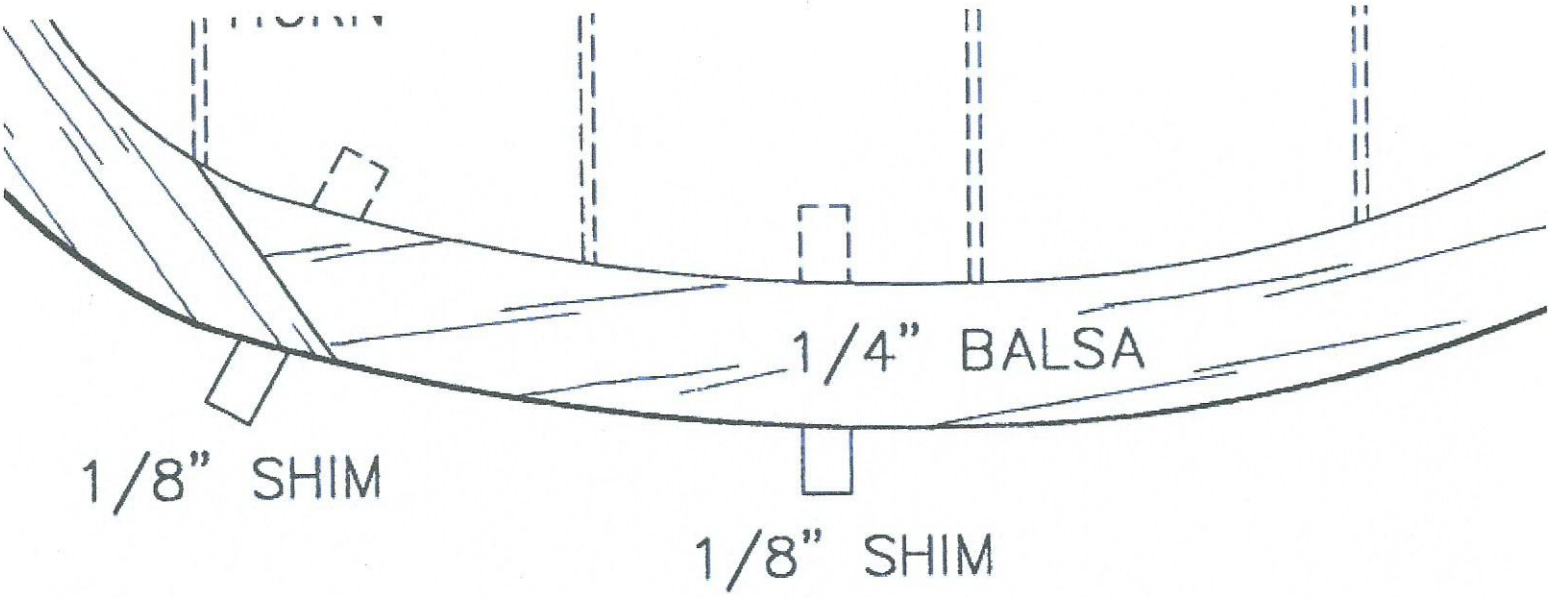
1/4" BALSA
1/8" SHIM
1/8" SHIM