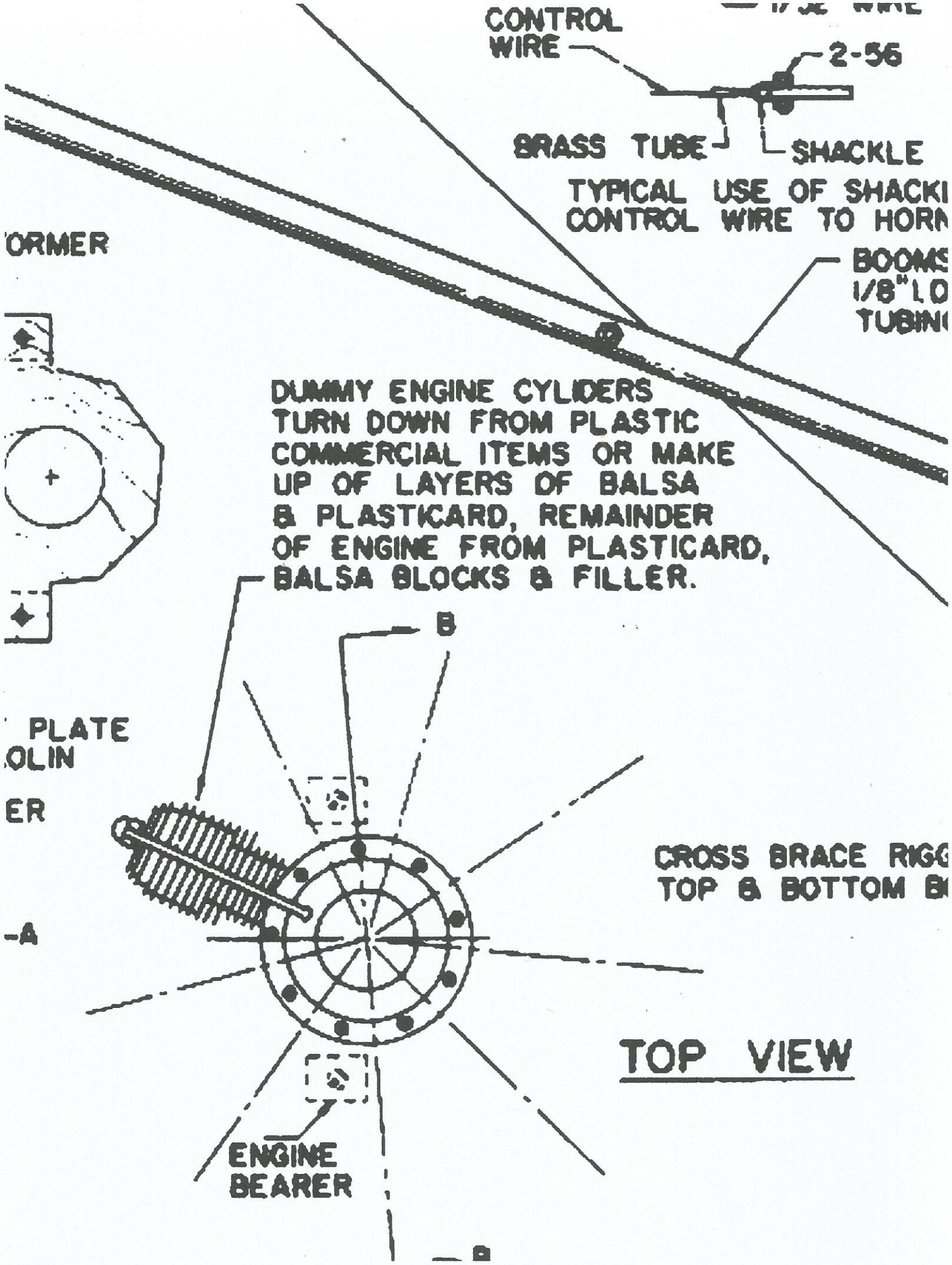
CONTROL WIRE
2-56
BRASS TUBE
SHACKLE
TYPICAL USE OF SHACKI
CONTROL WIRE TO HORN
ORMER
BOOMS
1/8" LO
TUBIN
DUMMY ENGINE CYLIDERS TURN DOWN FROM PLASTIC COMMERCIAL ITEMS OR MAKE UP OF LAYERS OF BALSA & PLASTICARD, REMAINDER OF ENGINE FROM PLASTICARD, BALSA BLOCKS & FILLER.
B
PLATE
OLIN
ER
CROSS BRACE RIGG
TOP & BOTTOM B
-A
TOP VIEW
ENGINE BEARER
B