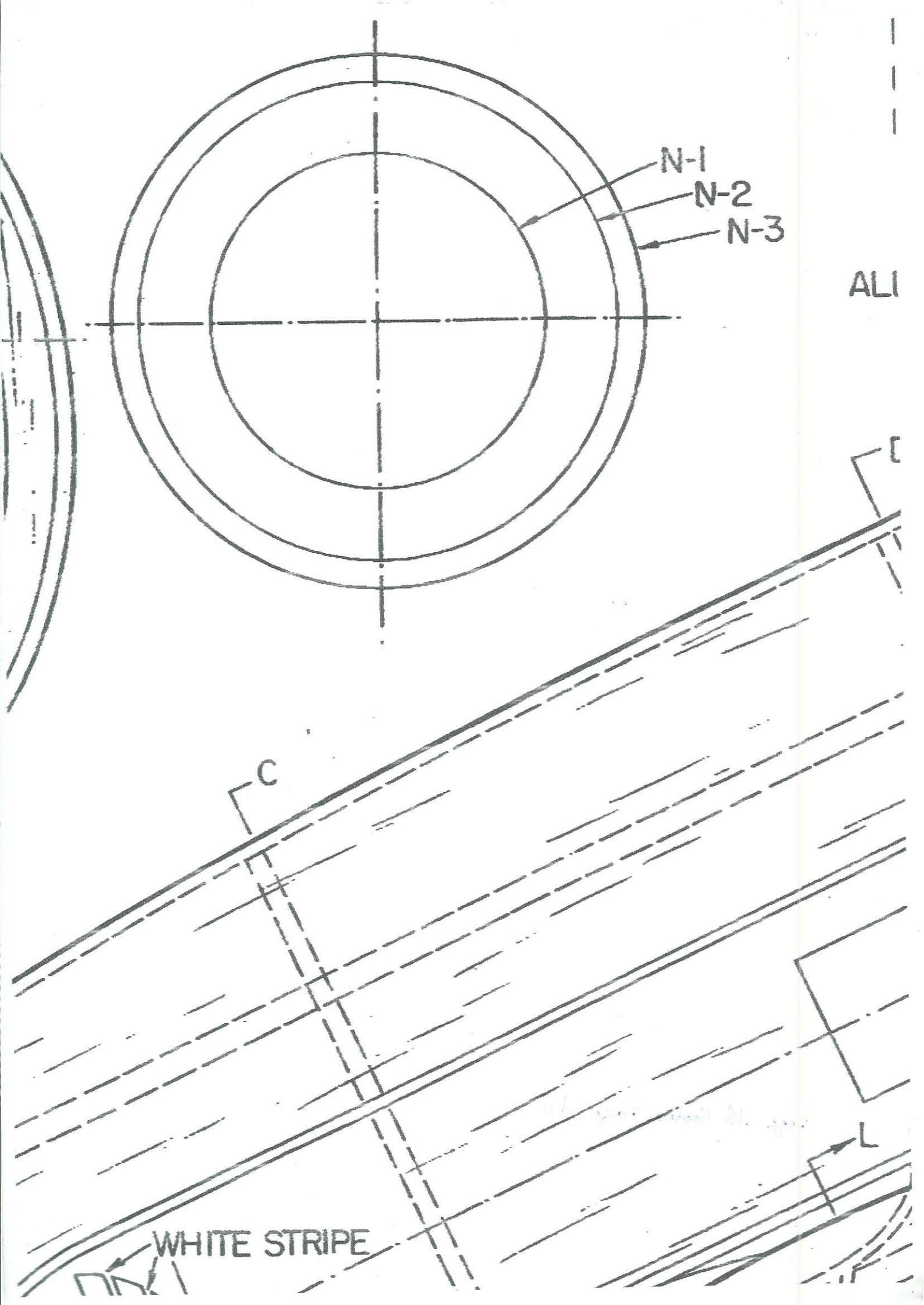
N-1
N-2
N-3
ALI
C
L
WHITE STRIPE