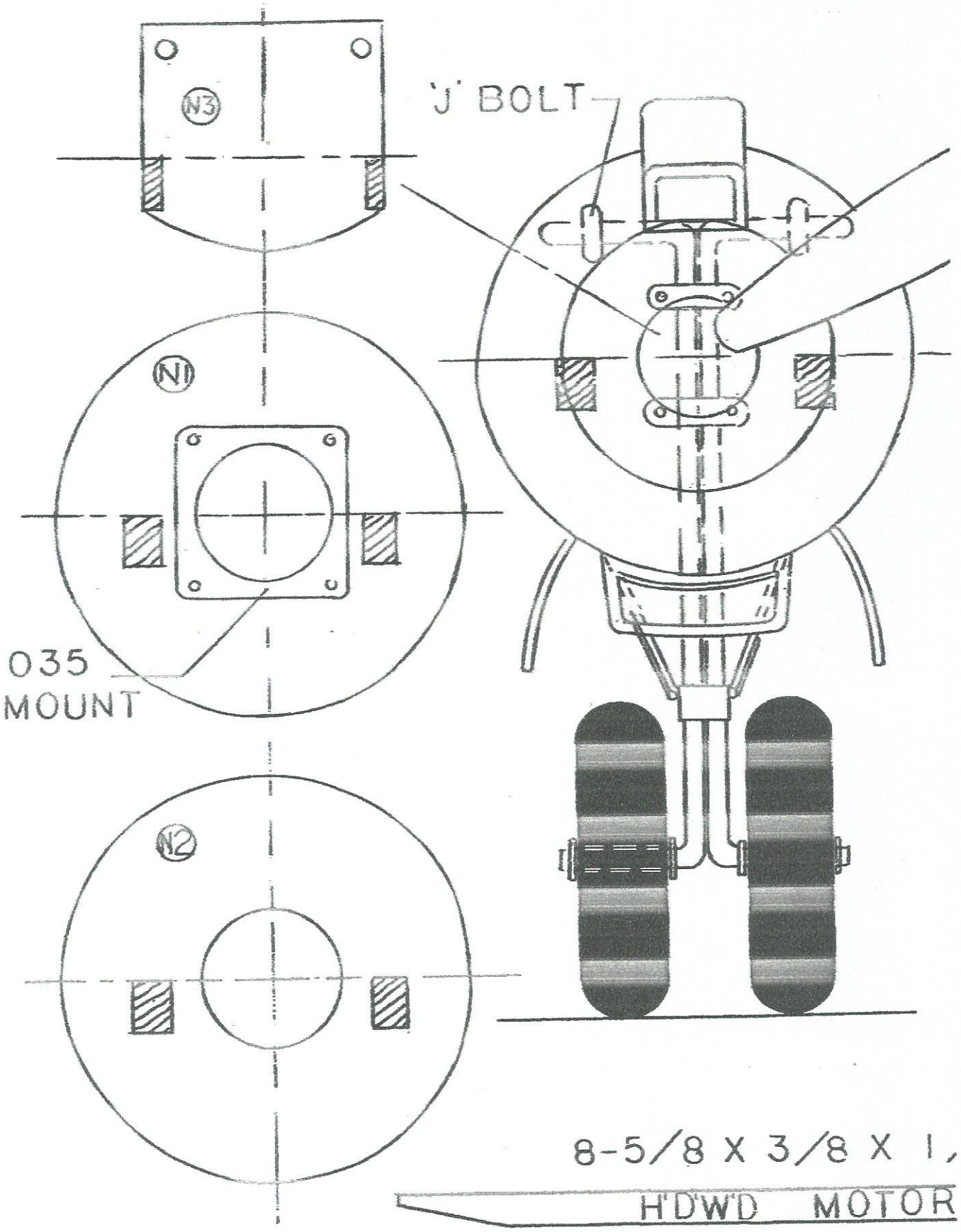
N3
'J' BOLT
N1
035
MOUNT
N2
8-5/8 X 3/8 X 1,
H'DW'D MOTOR